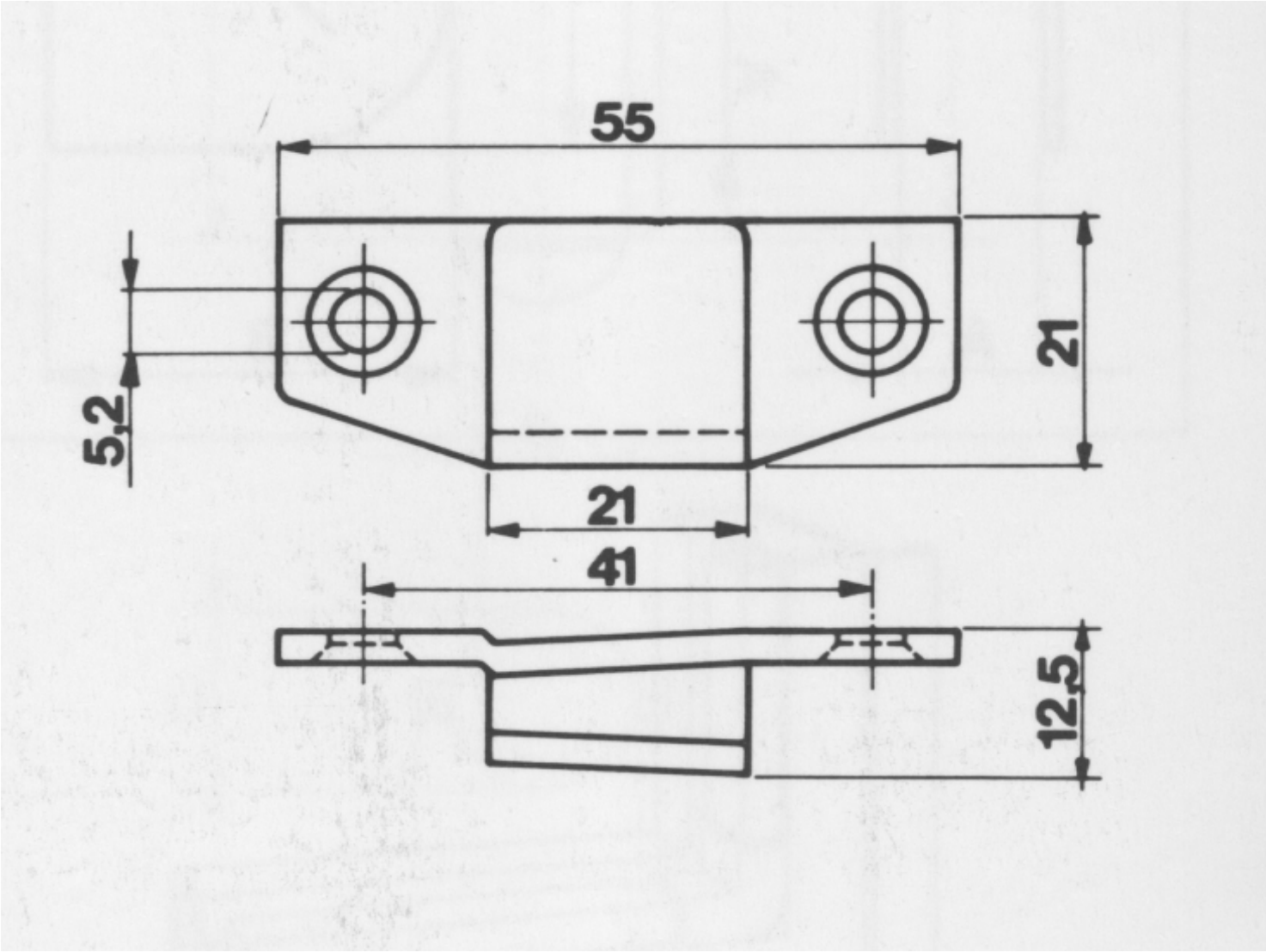*559.21 / 559.22*