# MAXI

## FAST INSTALLATION – AND A SOFT LIFT

KESSEBÖHMER

**Technical Support**

Short-URL:
https://kbgo.to/supe

**Product Information**

Short-URL:
https://kbgo.to/maxe

| Opening angle | Carcase height (mm) | Fixing bracket for the front | Model A<br>Item no. | Model B<br>Item no. | Model C<br>Item no. | Model D<br>Item no. |
|---|---|---|---|---|---|---|
| | | **for wood screws**<br>**PU: 25 sets** | **271710 0006**<br>nickel-plated | **271713 0006**<br>nickel-plated | **271721 0006**<br>nickel-plated | **271720 0006**<br>nickel-plated |
| | | **for euro screws**<br>**PU: 25 sets** | **271707 0006**<br>nickel-plated | **271711 0006**<br>nickel-plated | **271714 0006**<br>nickel-plated | **271722 0006**<br>nickel-plated |
| **75°** | 300 | | 3,8–7,1 kg | 6,7–13,7 kg | 11,9–21,0 kg | 15,4–27,3 kg |
| | 400 | | 2,8–5,3 kg | 5,0–10,3 kg | 8,9–15,8 kg | 11,6–20,5 kg |
| | 500 | | 2,3–4,3 kg | 4,1–8,3 kg | 7,2–12,5 kg | 9,4–16,2 kg |
| | 600 | | 1,9–3,5 kg | 3,3–7,0 kg | 5,9–10,6 kg | 7,6–13,7 kg |
| | 700 | | 1,6–3,0 kg | 2,8–5,7 kg | 5,0–8,8 kg | 6,5–11,4 kg |
| | 800 | | 1,4–2,7 kg | 2,5–5,1 kg | 4,4–7,9 kg | 5,7–10,4 kg |
| | 900 | | 1,3–2,4 kg | 2,2–4,6 kg | 4,0–7,0 kg | 5,2–9,1 kg |
| | 1.000 | | 1,1–2,1 kg | 2,0–4,1 kg | 3,6–6,3 kg | 4,6–8,2 kg |

Front weights per 1x fitting; for carcases wider than 600 mm 2x fitting

| | | | | | | |
|---|---|---|---|---|---|---|
| **90°** | 300 | | 3,0–5,3 kg | 5,1–10,2 kg | 9,1–15,8 kg | 11,9–20,8 kg |
| | 400 | | 2,3–4,0 kg | 3,8–7,6 kg | 6,9–11,9 kg | 8,9–15,6 kg |
| | 500 | | 1,8–3,2 kg | 3,1–6,1 kg | 5,5–9,6 kg | 7,2–12,5 kg |
| | 600 | | 1,5–2,7 kg | 2,6–5,1 kg | 4,6–7,9 kg | 6,0–10,4 kg |
| | 700 | | 1,3–2,2 kg | 2,1–4,2 kg | 3,8–6,6 kg | 4,9–8,7 kg |
| | 800 | | 1,1–2,0 kg | 1,9–3,9 kg | 3,4–5,9 kg | 4,4–7,8 kg |
| | 900 | | 1,0–1,8 kg | 1,7–3,4 kg | 3,0–5,2 kg | 3,9–6,9 kg |
| | 1.000 | | 0,9–1,6 kg | 1,5–3,0 kg | 2,7–4,7 kg | 3,6–6,2 kg |

Front weights per 1x fitting; for carcases wider than 600 mm 2x fitting

| | | | | | | |
|---|---|---|---|---|---|---|
| **110°** | 300 | | 2,4–4,0 kg | 3,9–7,5 kg | 6,8–11,6 kg | 9,2–15,0 kg |
| | 400 | | 1,8–3,0 kg | 2,9–5,6 kg | 5,1–8,7 kg | 6,9–11,2 kg |
| | 500 | | 1,4–2,4 kg | 2,4–4,5 kg | 4,0–7,1 kg | 5,7–9,0 kg |
| | 600 | | 1,2–2,0 kg | 1,9–3,8 kg | 3,3–5,9 kg | 4,5–7,6 kg |
| | 700 | | 1,0–1,7 kg | 1,7–3,1 kg | 2,9–4,8 kg | 3,8–6,2 kg |
| | 800 | | 0,9–1,4 kg | 1,4–2,8 kg | 2,6–4,3 kg | 3,4–5,6 kg |
| | 900 | | 0,8–1,3 kg | 1,3–2,5 kg | 2,3–3,8 kg | 3,0–5,0 kg |
| | 1.000 | | 0,7–1,2kg | 1,1–2,2 kg | 2,0–3,5 kg | 2,7–4,5 kg |

Front weights per 1x fitting;
for carcases wider than 600 mm 2x fitting

**Grey**

**Beige**

**White**

**Black**

**Fixing bracket for the carcase:**
**37 mm hole distance**

Set consists of:
1 fitting
1 fixing bracket for the carcase
1 fixing bracket for the front

Fig.: 90° Opening angle
(Dimensions in mm)

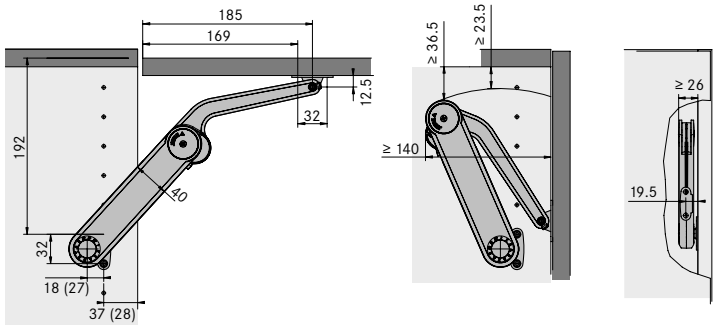


View left carcase side
(lifter installed right)

Front view